HEAD

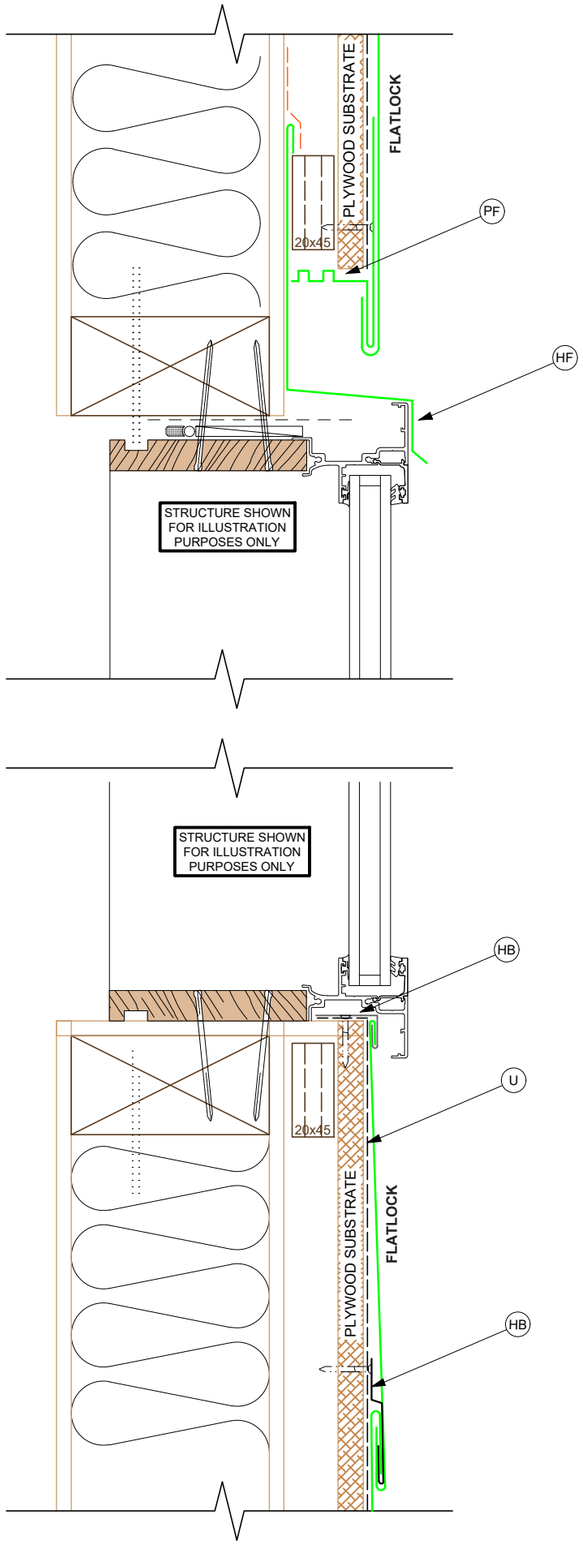

SILL

JAMB

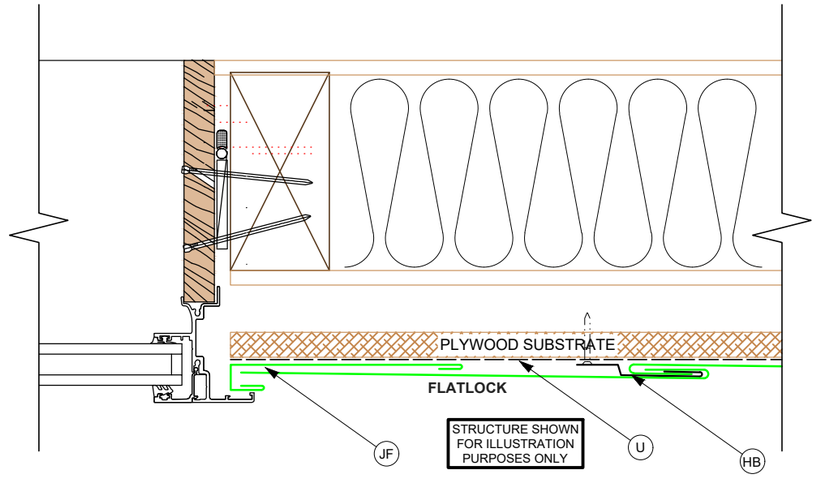

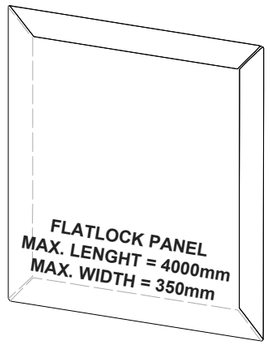

Flatlock joint on this drawing: Non-recessed
Detail is applicable to other flatlock joint types.

JB *JAMB FLASHING*
PF *PERFORATED FLASHING*
HB *HIDDEN BRACKET*
HF *HEAD FLASHING BY OTHERS*
U *UNDERLAY*

**Please refer to E2 for further information on flashings cover width.*

Information and details herein are only a baseline for system design and installation. Modification to meet project requirements is the responsibility of the designer and architect. Architectural Envelopes staff are available to assist in this process.

FLATLOCK PANELS
WINDOW FLASHINGS - FLUSH

Architectural Envelopes Ltd
54b McNulty Road, Cromwell 9310
P.O. Box 37, Lake Hawea 9345
Email: info@architecturalenvelopes.nz
www.architecturalenvelopes.nz

SCALE: 1:3

Date: **3 Oct 2019**